NOTES: (unless otherwise specified)

1. ASSEMBLY WEIGHT:.3 ± .1 lbs
2. HARNESS LENGTH: 14 ± 3 INCHES
3. HARNESS NOT SHOWN IN ALL VIEWS
4. REFER TO MONITOR DRAWINGS FOR PINOUT INFORMATION
5. CONNECTOR: 11W1, MALE
   MATE: 11W1, FEMALE

ELECTRONIC REVISION CONTROLLED

REVISIONS

ZONE	REV	DESCRIPTION	DATE	BY	CHG NO	APRV
	A	INITIAL DRAWING RELEASE	07/09/09	GJH	EC09286	
A1	B	CHG HARNESS LENGTH FROM 16 ± 2	02/09/10	GJH	EC10059	SC
A1	C	ADD CONNECTOR KIT INFO, NOTE 5	02/15/10	GJH	EC10074	SC
A1	D	REMOVE CONNECTOR KIT INFO, NOTE 5	02/18/10	GJH	EC10078	SC

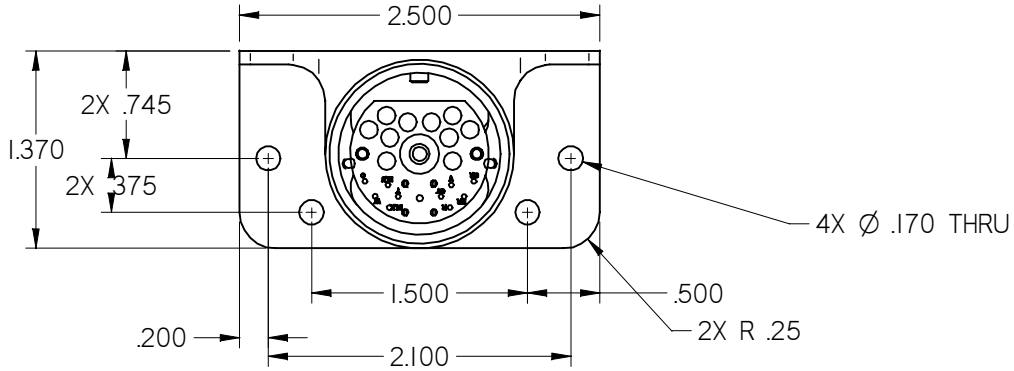

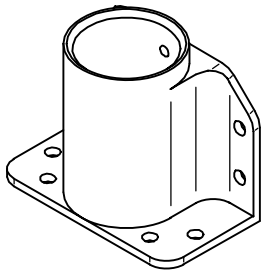

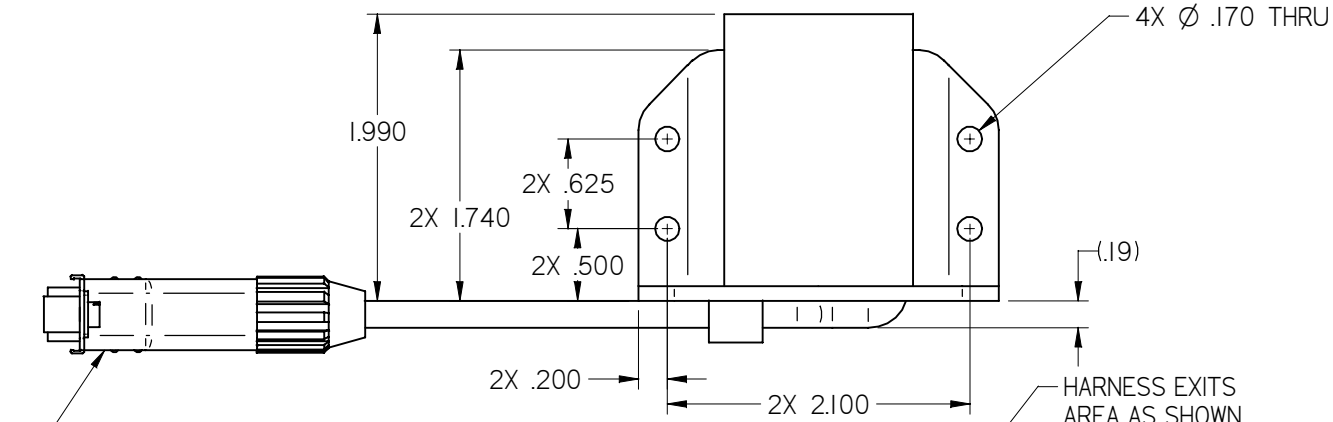

HARNESS EXITS AREA AS SHOWN

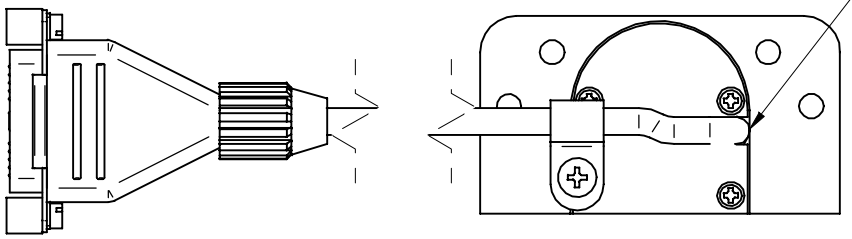

UNLESS OTHERWISE SPECIFIED DIMENSIONS ARE IN INCHES

.XX = ± .020
.XXX = ± .005
∠ = ± 1.0°
RADII ± .020

INTERPRET DIM AND TOL PER ASME Y14.5M - 1994

THE INFORMATION CONTAINED HEREIN IS PROPRIETARY TO ROSEN AVIATION, LLC. IT SHALL NOT BE REPRODUCED OR DISCLOSED IN WHOLE OR IN PART OR USED FOR ANY DESIGN OR MANUFACTURE EXCEPT WHEN SUCH USER POSSESSES DIRECT, WRITTEN AUTHORIZATION FROM ROSEN AVIATION. THIS DRAWING MAY BE COVERED UNDER ONE OR MORE U.S. OR INTERNATIONAL PATENTS, PLEASE CONTACT ROSEN AVIATION FOR SPECIFIC INFORMATION.

ROSEN AVIATION
1020 OWEN LOOP SOUTH
EUGENE, OREGON 97402
TEL: (541) 342-3802 FAX: (541) 342-4912

APPROVALS	INITIAL	DATE
DRAWN BY	SC	06/09/09
CHECKER	MCS	07/08/09
ENGINEER	SC	07/09/09

TITLE
OUTLINE AND INSTALLATION
BASE ASSY, SLA, SDI

DWG NO 0100-202-CD

FIRST CALLED FOR: (FCF)
SDI ARMS

SIZE A | REV D | SCALE NTS | SHEET 1 OF 1

©2010 ROSEN AVIATION, LLC